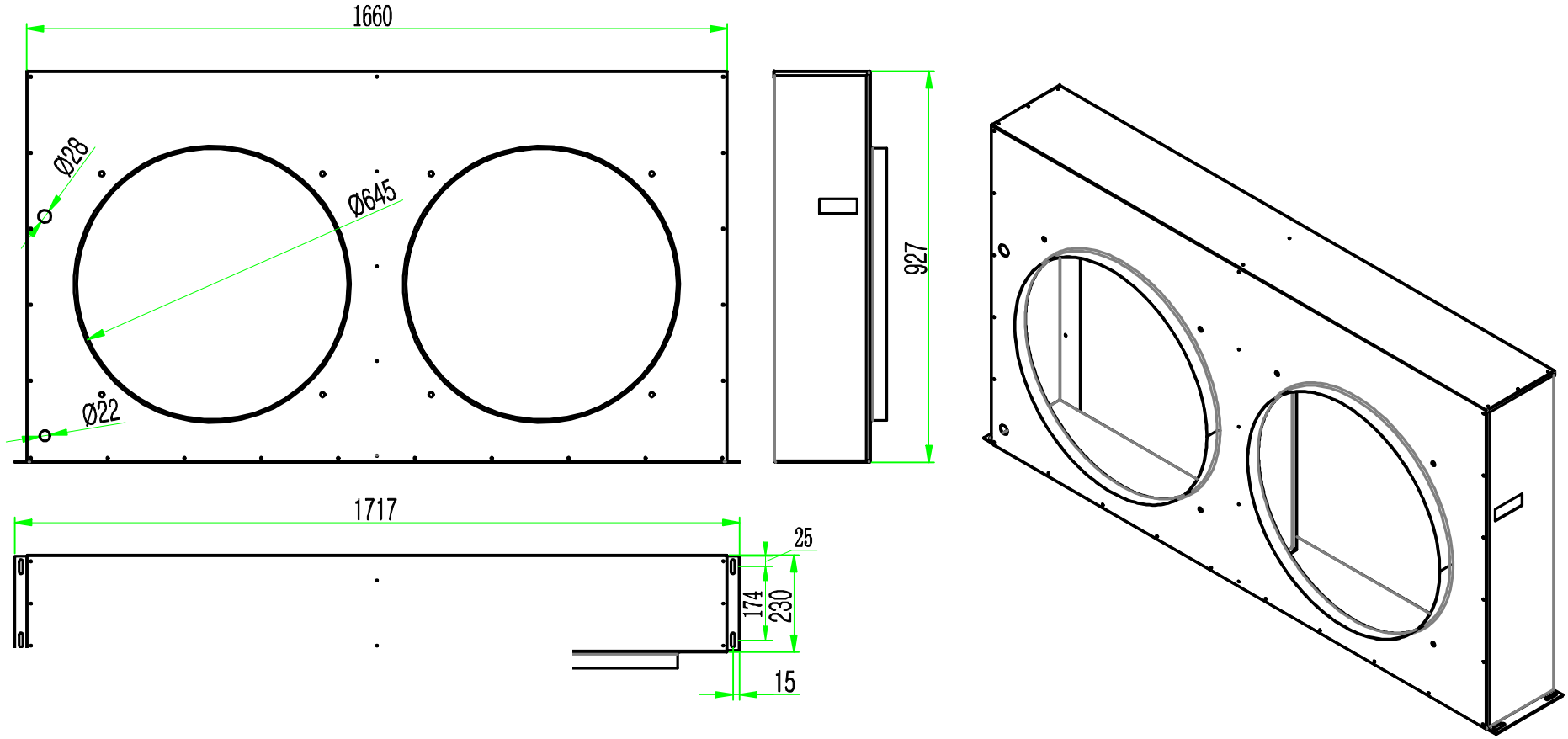

							15 HP
Designed by							
Checked by							
			Appr. by				