CATEGORY : CAT I / A1

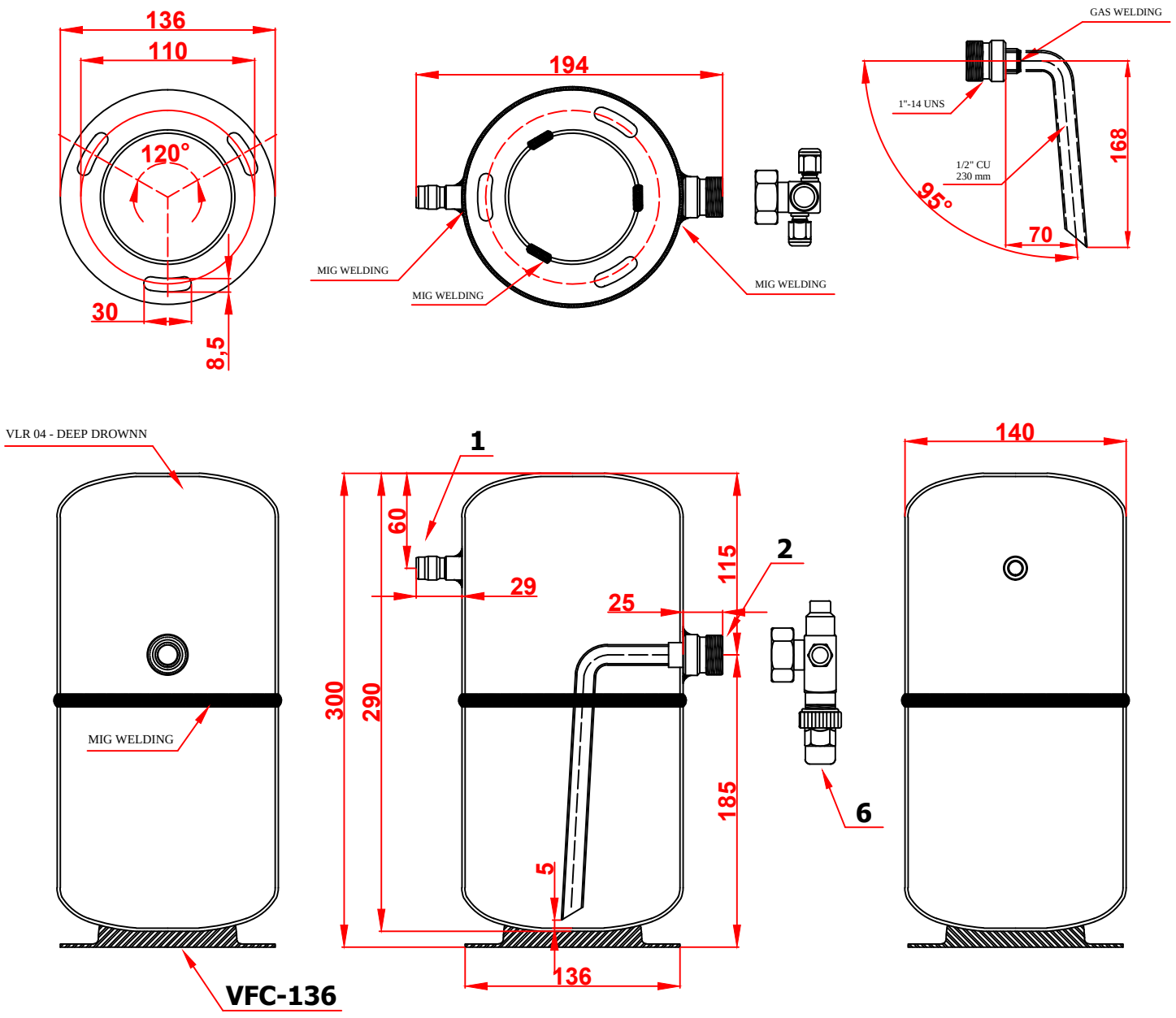

GVN Refrigeration Components

Company: GVN STANDART

Product: VERTICAL LIQUID RECEIVERS

Code: VLR 04

TECHNICAL INFORMATION	
Cooler Fluid Type (Refrigerant)	R22,R134a,404A, R407C,R507A
Capacity (Volume)	4 Lt.
Operating Pressure (PS)	33 Bar.
Test Pressure (PT)	48 Bar.
Allowable Temperature (TS)	Min.-10ºC / Max. 120ºC
Packaging Size & Weight	
Drawed By	Tuncay TEKSEN
Approved	Mustafa DEMIRCI
Date	16.04.2013

	CONNECTIONS		QTY
01	Inlet Connection	3/8" - ODS	1 Pcs.
02	Outlet Connection	1"-14 UNS	1 Pcs.
03	Safety Valve Connection		
04	Sight Glass		
05	Inlet - Rotalock Valve		
06	Outlet - Rotalock Valve	RVA-3/8"	1 Pcs.
07	Safety Valve		
08	Level Sensor Connection		
09	Liquid Level Sensor		
10	Blanking Cap (Plug)		
	Colour	RAL 9005	

Raw Material : DIN EN 10130:2006 DC04-7114

PS :Please Contact Us For Special Connection Request

ALTERNATIVE CONNECTIONS FOR ODS Inch - mm - (dm)		
1/4"- Ø6 (6,7)	7/8"- Ø22 (22,2)	2 5/8"- Ø66 (67,0)
3/8"- Ø9 (9,7)	1 1/8"- Ø28 (28,8)	3"- Ø76 (76,4)
1/2"- Ø12 (13,2)	1 3/8"- Ø35 (35,2)	3 1/8"- Ø80 (81,0)
5/8"- Ø16 (16,2)	1 5/8"- Ø42 (42,4)	3 1/2"- Ø89 (90,0)
3/4"- Ø19 (19,2)	2 1/8"- Ø54 (54,4)	- Ø92 (93,0)

ROTALOCK VALVE	SIGHT GLASSES	NPTF	FLARE
1"-14 UNS	SW36	1/4" NPTF	1/4" SAE
1 1/4"-12 UNF	SG-1 3/4"	1/2" NPTF	1/2" SAE
1 3/4"-12 UN	SG-2 1/4"	3/4" NPTF	5/8" SAE
2 1/4"-12 UN	DN80	1" NPTF	3/4" SAE

TOLERANS	
DIN ISO 2768-mK	ISO E
0,5 - 6 mm	± 0,1
6 - 30 mm	± 0,2
30 - 120 mm	± 0,3
120 - 400 mm	± 0,5
400 - 1000 mm	± 0,8

GUVEN SOGUTMA
Uniteleri San. ve Tic. Ltd. Sti.
www.gvn.com.tr

Tel. : +90 (212) 230 2113 -232 4147
Fax. : +90 (212) 231 6395 - 2255296
Add. : Dolapdere Cad. Lalezar Sok. No:7, 34375, Pangalti, Istanbul, TURKEY
E-mail : info@guvensogutma.com

BEST QUALITY, BEST SERVICE, BEST PRICE

MADE IN TURKEY