Oil Level Sensor

OLS2-S21

www.gvn.com.tr info@guvensogutma.com

Description

This Oil Level Sensor is designed as a oil/liquid level switch to be used in compressors, receivers and vessels. The sensor output is a relay switch contact.

This optoelectronic Oil Level Sensor, id based on infrared LED and a light receiver. Infrared light reflection/refraction at prism depending from oil level controls the circuit (relay).
The separate design of the electronic module allows the replacement in case of any malfunction.
To insure high ambient operating temperature most electronic parts are selected according to the 'industrial' standard (enhanced temperature range).

Functional Specification

After a power on delay the sensor relay switches on, if liquid level has been detected.
If the sensor detects a low oil level, the relay will switch off.
In every case of status change (i.e. enough oil / low oil) the sensor will recheck the staus for about 3 seconds before reacting. This 'delay' prevents the sensor from overacting, i.e. in case of liquid bubles, etc.
The red LED remains 'ON' if the sensor detects enough liquid. The red LED is flashing during low liquid level.

Electrical Specification

Operating Power, or	AC 50/60Hz 230V
Motor Power Sense Line Voltage, or	AC 50/60Hz 230V
Ambient Temperature Range	- 30°C …+ 85°C
Maximum temperature at prism	+ 120°C
Delay on power on	< 1 second
Delay until relay off from detection of liquid loss	3 second
Relay rating data	5A/250V AC
Connection Cable	5 x 0.5mm², length=1 meter, color coded

Mechanical Specification

Steel Housing Material (prism and electronic unit holder)	9SMn28
Prism Material	Fused Glass
Test Pressure	100 bar
Unit Mounting	M20 x 1.5
Weight of steel housing	appr. 80g
Weight of electronic module	appr. 80g
Protection Class	IP54

Connection Diagram (Application Samples)

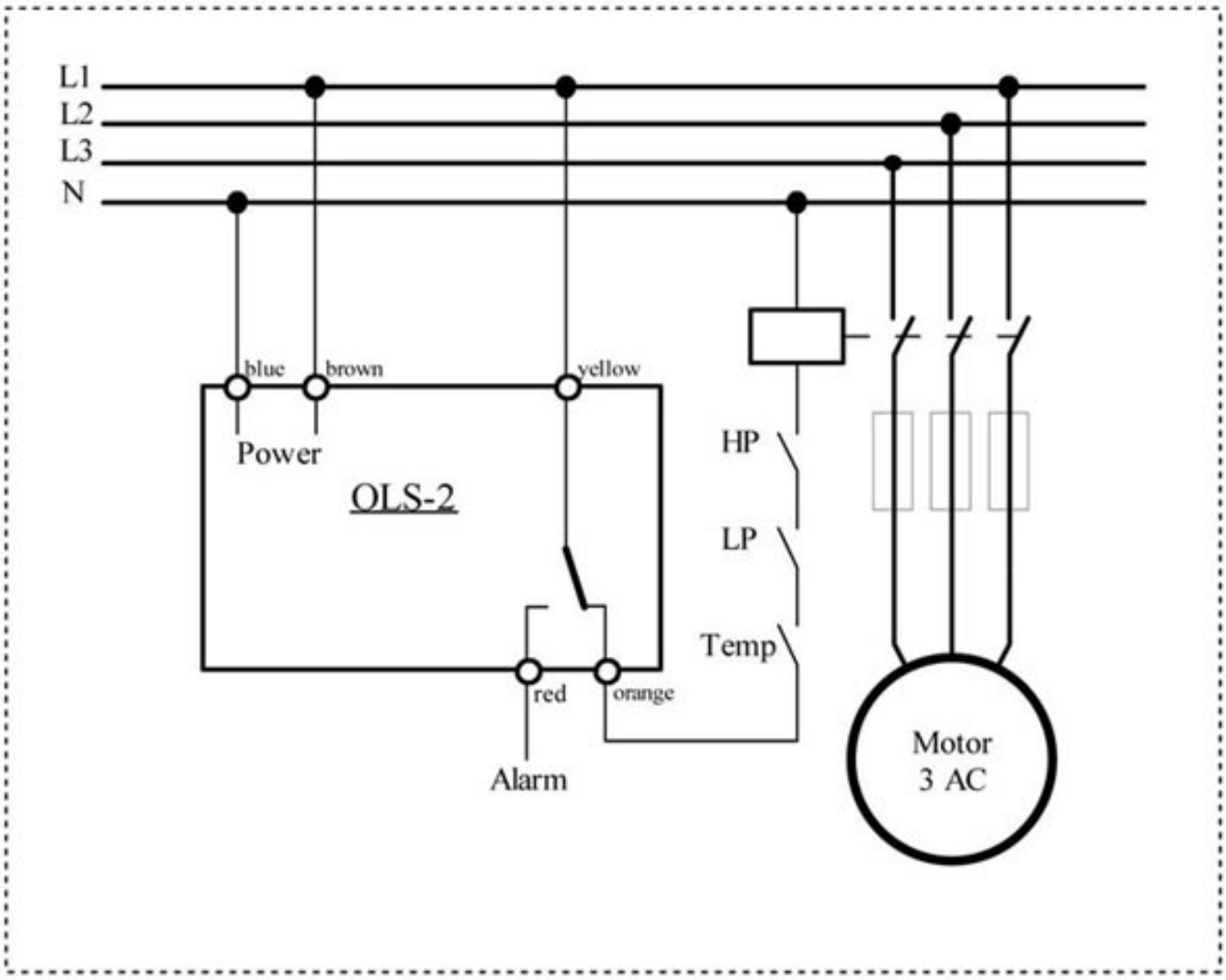

Figure 01 (OLS2 – oil level switch for compressor protection)

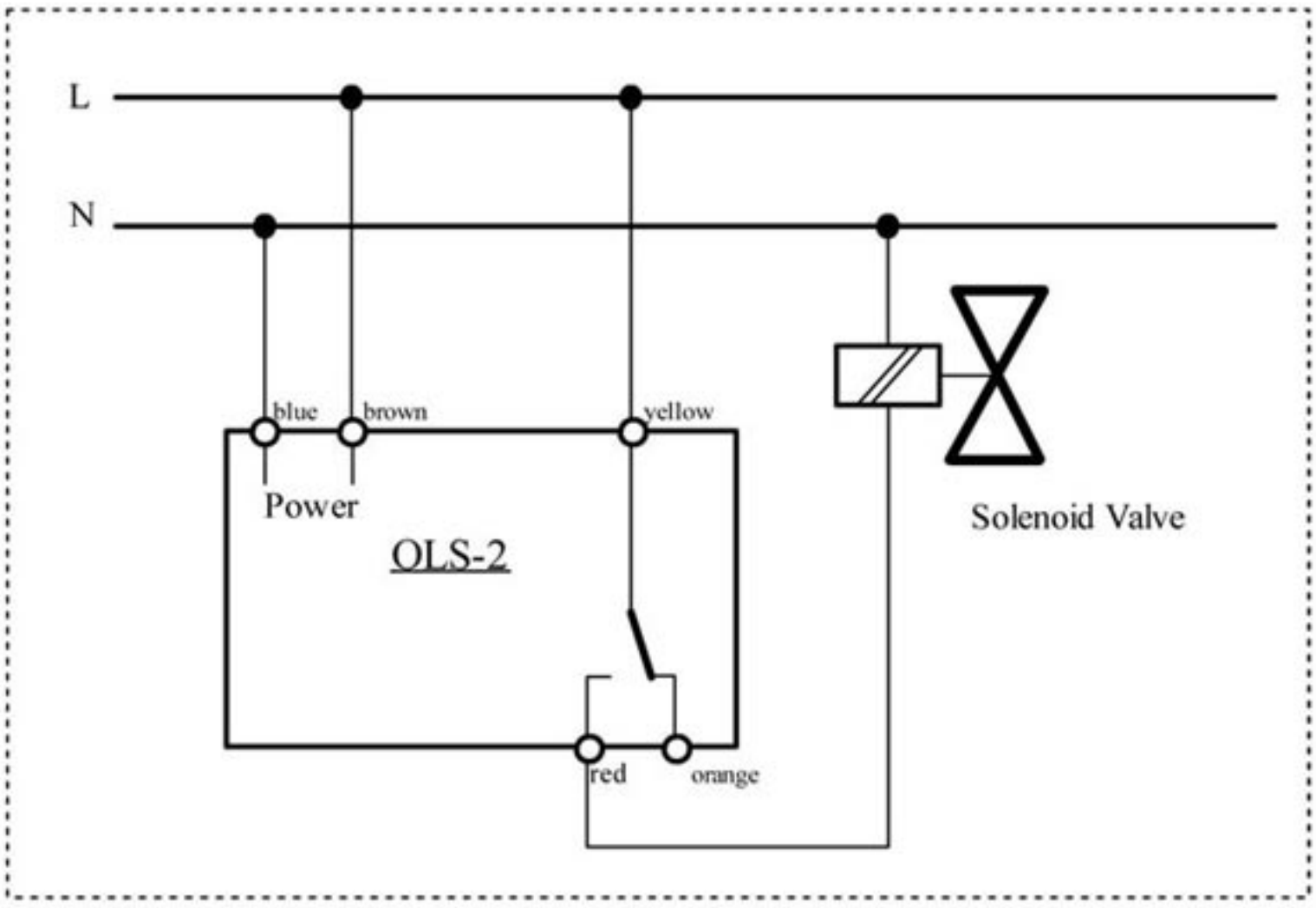

Figure 02 (OLS2 for oil level control - solenoid control for oil refill)

Oil Level Switch Dimensions

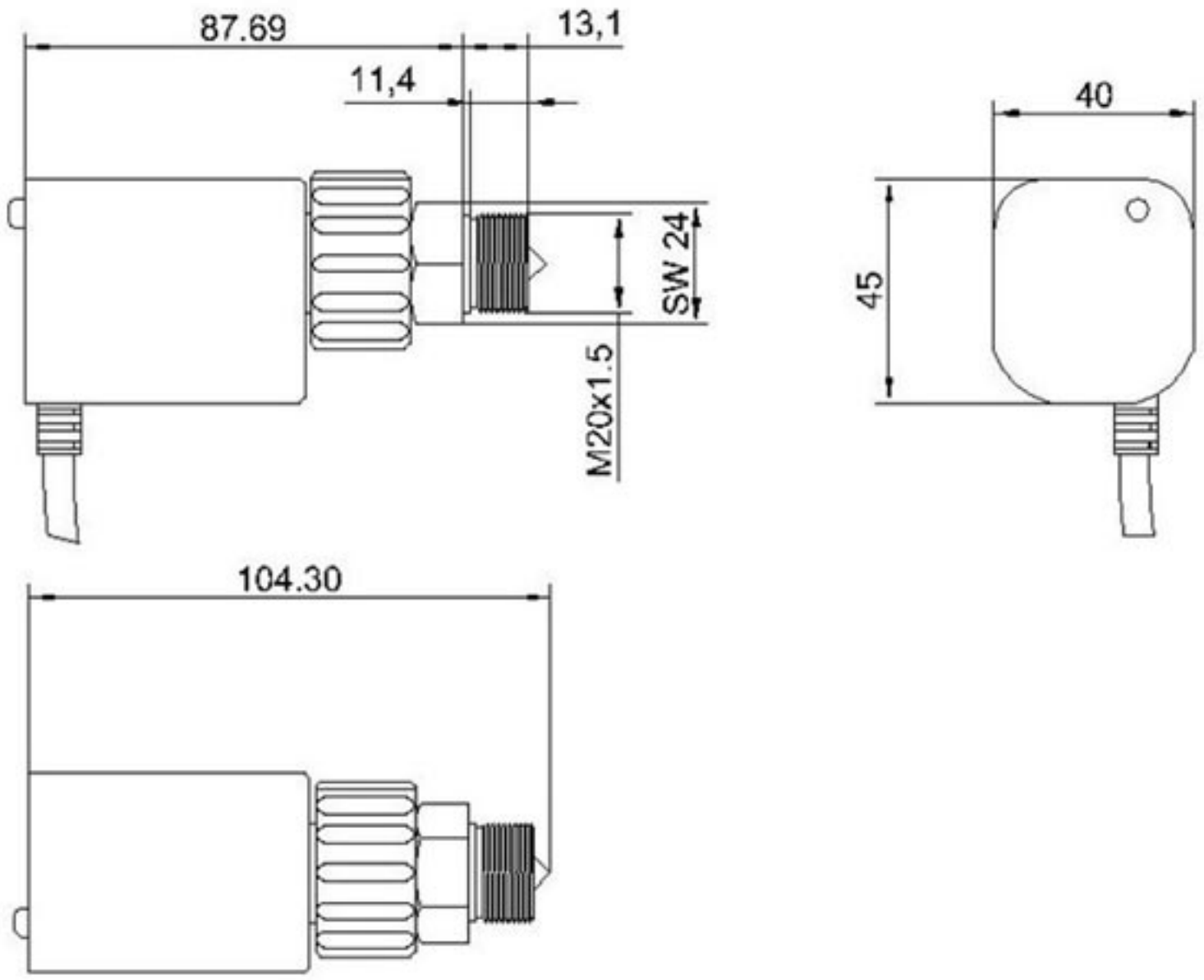

Figure 03