Product model	YSWF127L50P6-840N-710 S
product type	External rotor axial flow fan
customer	以色列DAYAN
Product number	
certification	CE、CCC

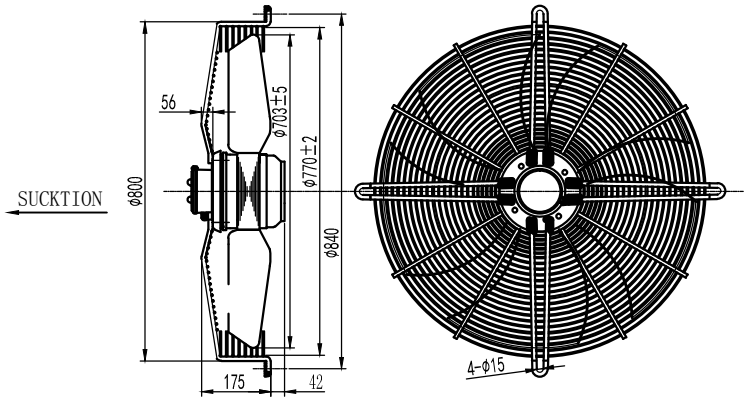

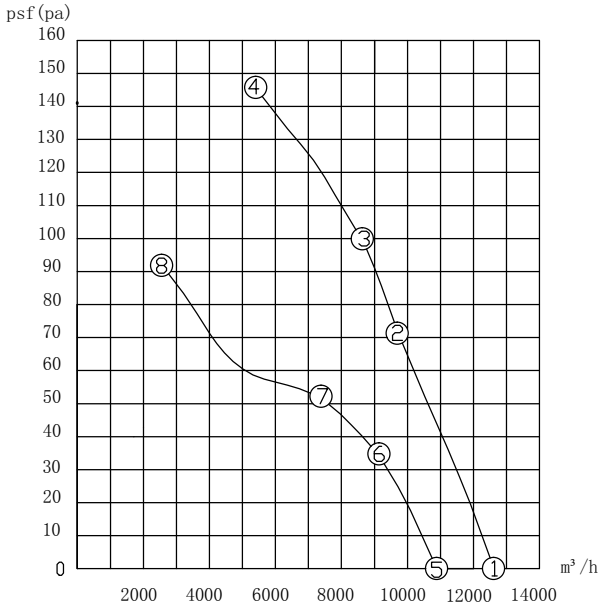

PS: Fan working performance tested with Maer wall plate, and under standard atmospheric pressure at 20 ℃.

Condition of use:

1) voltage and frequency: Y/△ 3 ~ 400 V ±5 % 50 Hz 。
2) Lead cable:Terminal block, the recommended standard of lead wire is not less than 1.0 mm².
3) Installation position: vertical or upward.
4) ambient temperature:-40~70℃。

The external wiring diagram:

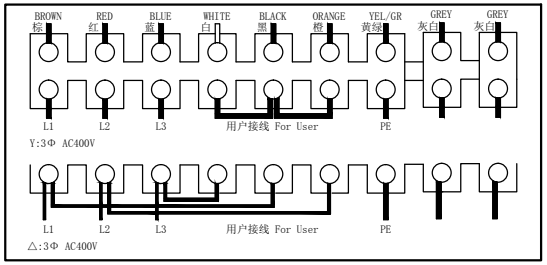

Wiring diagram:

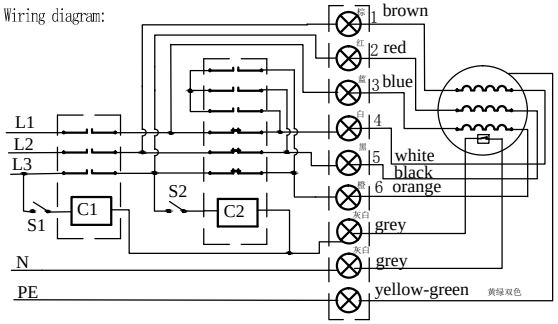

C1 - run control contactor, S1 connected, fan operation.
C2 - Y/△ operation control contactor, S2 disconnect, delta connection; S2 on Y connection.

Performance parameters at key point:

△	psf (pa)	I (A)	P1 (W)	n (r/min)	Q (m³/h)	Note
①	0	1.83	573	949	12613	
②	71	1.87	678	935	9735	
③	99	1.89	714	930	8726	MAX EFF.
④	145	1.95	805	918	5404	IMAX
Y						
⑤	0	1.01	569	765	10888	
⑥	34	1.06	607	738	9105	
⑦	52	1.08	618	728	7299	MAX EFF.
⑧	92	1.22	708	645	2559	IMAX

Test data at free：

connection	UAC (V)±5%	f (Hz)	P1 (W) ±10%	I (A)±10%	n (r/min) ±10%	Noise dB(A)
△	3~400	50	810	1.90	925	73
Y	3~400	50	628	1.10	801	70

Technical specification:

1. All parts of fan should be properly assembled, no oil or dirt on the surface, no obvious distortion, mechanical damage and other defects.
2. Fan rotation is flexible, no delay, no operation sound, no scratch and other undesirable phenomena.
3. The safety requirement of fan is performed according to GB12350-2000, the electrical strength is 1800Vmin, and the insulation resistance is not less than 100M at room temperature.
4. Motor insulation class, F CLASS.
5. Motor protection level, IP54, fan protection level, IP2X.
6. The fan balance level is: 925±10%r/min high than G6.3,vibration value is less than 5.4mm/s.
7. External TMP.

Nameplate:

DYNAIR
YSWF127L50P6-840N-710 S 3~400V/50Hz
△ 714W 1.89A 930r/min @ 99Pa
Y 618W 1.08A 728r/min @ 52Pa
η=33.68% (A,static)N=40.8 CL.F IP54 2018/07
CE

		The signature	(date) (month) (year)
state	Deliver before		
	Mfr the confirmation		
drawing			
audit			
approval			

Product Specification