ALCO UDK ULTRA-DRY KLEANER LIQUID LINE FILTER DRIER

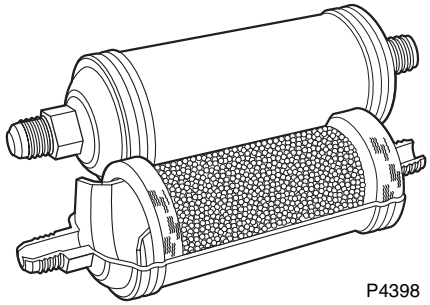

P4398

FEATURES

- Solid copper connections.
- Ultra high moisture capacity.
- Meets or exceeds all compressor manufacturer desiccant standards.
- Corrosion resistant epoxy powder paint finish.

SPECIFICATIONS

- Desiccant Blend: 75% molecular sieve and 25% activated alumina.
- Filtration . . . . . 40 microns
- Maximum Working Pressure: . . . . . Sizes: 03-16 600 psig
  . . . . . 30-75 500 psig
- UL File Number: . . . . . SA 3124
- CSA File Number: LR100624
  . . . . . LR32462

NOMENCLATURE

UDK	08	3	S
Series	Unit Size (in cu. in.)	Connection Size (in 1/8″)	S = ODF Connection (omit for SAE)

Above example: UDK 08 3 S

UDK CAPACITY TABLES

PART NO.	CONNECTIONS	FLOW CAPACITY TONS @ 1 psi ΔP (For kW, multiply tons by 3.5)							WATER CAPACITY DROPS OF WATER													
									R-12		R-134a		R-22		R-407C		R-410A		R-404A/507		R-502	
		R-12	R-134a	R-22	R-410A	R-407C	R-404A/507	R-502	75° F	125° F	75° F	125° F	75° F	125° F	75° F	125° F	75° F	125° F	75° F	125° F	75° F	125° F
UK 08 3	3/8 SAE	3.5	4.3	4.7	4.7	4.6	3.1	3.0	366	320	305	281	284	258	241	187	160	143	316	298	327	290
UK 08 3 S	3/8 ODF	3.4	4.2	4.6	4.6	4.5	3.0	3.0														
UK 08 4 S	1/2 ODF	5.7	7.0	7.6	7.6	7.4	5.1	4.9														
UK 16 3 S	1/4 ODF	4.0	4.9	5.3	5.3	5.2	3.6	3.5	483	427	432	396	401	363	306	233	197	174	450	422	436	390
UK 16 4	1/2 SAE	6.8	8.3	9.0	9.0	8.8	6.0	5.8														
UK 30 3	3/8 SAE	3.9	4.7	5.1	—	5.0	3.4	3.3	996	864	860	809	818	744	673	522	—	—	912	859	882	778
UK 30 5 S	5/8 ODF	11.9	14.5	15.7	—	15.4	10.5	10.2														

NOTE: There are a limited number of the above filter driers available. Once they are gone, these parts will be unavailable.