Compressor
Voltage Code : FZ

AE4440Y-FZ1A

High Temp. Commercial (HP)

220 - 240V 1~ 50 Hz

R134a / R513A

AE4440Y-FZ1A_BF

Conditions	Frequency	Nominal Cooling Capacity Watts	Nominal Cooling Capacity BTU/h	Sound Power ISO3745 / ISO 3743-1
EN12900_MHP / R134a	50 Hz	508	1733	52 dBA
EN12900_MHP / R513A	50 Hz	541	1844	52 dBA

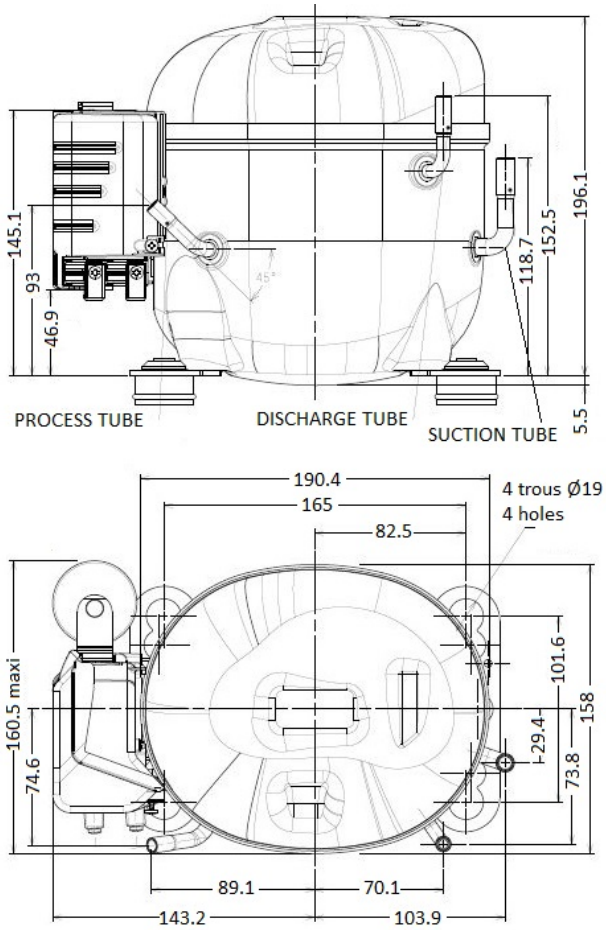

Displacement (cc)	10,33
Net Weight (Kg)	9.6
Oil Quantity (cc)	280.0
Oil Type	Polyolester
Expansion Device	Capillary_Tube/Expansion_Valve
Cooling	Fan
Main Winding (Ohm)	8.1
Start Winding (Ohm)	18.3
Current	
RLA (A)	2.5
MCC (A)	3.7
LRA (A)	13.2
Electrical Equipment	CSIR
Overload	T0759
Time Check	2.8s - 5.2s / 14.5 A
Open Temp	145° C
Close Temp	61° C
Start Capacitor	88 µF / 250 V
Current Relay	RP48**
Pick Up	7.80A
Drop Out	6.70A
Optional	RP40**
Refrigerating connection for	
Suction Tube	7.9 (5/16")
Discharge Tube	6.35 (1/4")
Process Tube	6.35 (1/4")

* EN12900_MHP : T°Cond. 45.0°C / T°Evap. -10.0°C / T°Return gas temp.. 20.0°C T°Subcooling. 0.0K

Certificates :

Note : Tecumseh reserves the right to change information contained in this document without notification.

Selection program - V4.6_2024177 - 07/18/2024

AE4440Y-FZ1A	Tension FZ : 220 - 240V 1~ 50 Hz

Les performances sont données dans les **conditions EN12900_MHP :**
Condition Dew

The performance data are in **EN12900_MHP conditions :**
Dew Condition

Gaz aspirés :	20.0 °C
Sous refroidissement :	0.0 K
Return gas :	20.0 °C
Subcooling :	0.0 K

© 2024 Tecumseh Products Company
All rights reserved

50 Hz R134a

N°3061

4 | T condensation	5 | T évaporation	(°C)	-25	-20	-15	-10	-5	0	5	10	15
30	1 | P frigorifique	(Watt)	290	380	488	619	775	960	1176	1426	1715
	2 | P absorbée	(W)	209	231	253	276	298	318	336	351	363
	3 | I absorbée	(A)	1.99	2.01	2.04	2.09	2.15	2.21	2.29	2.39	2.49
40	1 | P frigorifique	(Watt)	249	332	429	545	684	847	1038	1260	1517
	2 | P absorbée	(W)	217	241	266	293	321	348	375	399	422
	3 | I absorbée	(A)	1.90	1.94	2.00	2.06	2.14	2.23	2.33	2.44	2.56
50	1 | P frigorifique	(Watt)		283	369	471	591	733	899	1093	1317
	2 | P absorbée	(W)		254	281	312	344	378	412	446	478
	3 | I absorbée	(A)		1.94	2.01	2.09	2.19	2.30	2.42	2.55	2.70
60	1 | P frigorifique	(Watt)			311	398	499	619	760	926	1118
	2 | P absorbée	(W)			303	336	373	412	453	495	537
	3 | I absorbée	(A)			2.08	2.19	2.30	2.43	2.57	2.72	2.89

50 Hz R513A

N°3173

4 | T condensation	5 | T évaporation	(°C)	-25	-20	-15	-10	-5	0	5	10	15
30	1 | P frigorifique	(Watt)	334	429	541	673	826	1003	1207	1440	1704
	2 | P absorbée	(W)	233	253	274	296	317	340	362	385	409
	3 | I absorbée	(A)	2.21	2.20	2.21	2.24	2.28	2.36	2.47	2.62	2.80
40	1 | P frigorifique	(Watt)	281	367	468	586	723	883	1067	1277	1517
	2 | P absorbée	(W)	237	261	286	312	339	367	396	426	457
	3 | I absorbée	(A)	2.08	2.11	2.15	2.20	2.26	2.35	2.46	2.60	2.78
50	1 | P frigorifique	(Watt)		308	394	496	615	754	915	1100	1312
	2 | P absorbée	(W)		271	300	331	363	397	432	469	508
	3 | I absorbée	(A)		2.07	2.14	2.22	2.31	2.41	2.54	2.68	2.86
60	1 | P frigorifique	(Watt)			327	409	507	622	757	914	1096
	2 | P absorbée	(W)			318	353	391	431	473	517	564
	3 | I absorbée	(A)			2.18	2.29	2.42	2.54	2.69	2.85	3.03

1 = cooling capacity 2 = power input 3 = current 4 = condensing temperature 5 = evaporating temperature

Nota : Tecumseh se réserve le droit de modifier les informations contenues dans ce document sans préavis.

Note : Tecumseh reserves the right to change information contained in this document without notification.