Product model	YSWF102L50P4-635N-550 S
product type	External rotor axial flow fan
customer	以色列DAYAN
Product number	
certification	CE,CCC

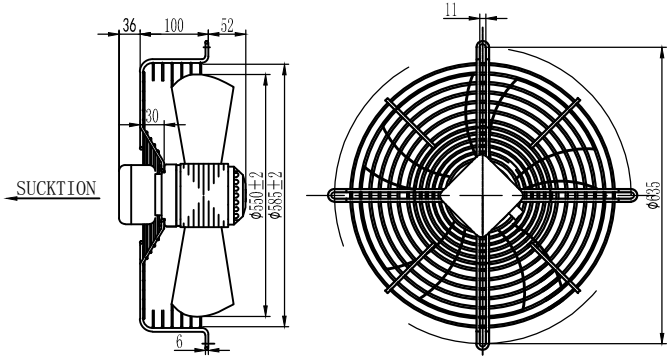

Wiring diagram:

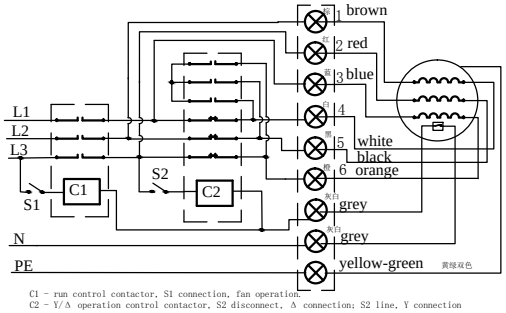

C1 - run control contactor, S1 connection, fan operation.
C2 - Y/Δ operation control contactor, S2 disconnect, Δ connection; S2 line, Y connection

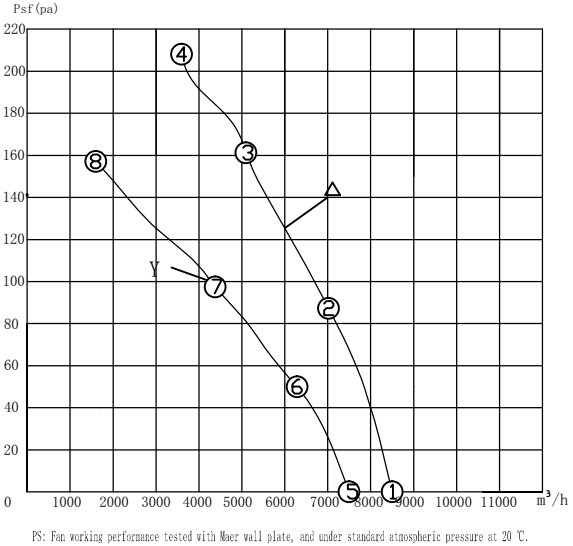

PS: Fan working performance tested with Maer wall plate, and under standard atmospheric pressure at 20 ℃.

Condition of use:

1) voltage and frequency: △/Y, 3 ~ 400 V± 5 %, 50 Hz。
2) Qualification requirements: Terminal block, the recommended standard of lead wire is not less than 0.75 mm²。
3) Installation position: vertical or upward.
4) ambient temperature: -40~60℃。

The external wiring diagram:

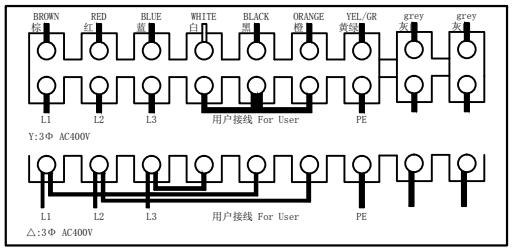

Performance parameters at key point:

△	psf (pa)	I (A)	P1 (W)	n (r/min)	Q (m³/h)	Note
①	0	1.09	487	1414	8549	
②	88	1.21	602	1388	7012	
③	161	1.29	680	1368	5158	MAX EFF.
④	208	1.37	747	1350	3645	IMAX
Y						
⑤	0	0.65	393	1223	7477	
⑥	47	0.74	455	1170	6362	
⑦	97	0.82	507	1105	4433	MAX EFF.
⑧	157	0.98	610	957	1591	IMAX

Test data at free：

connection	UAC (V)±5%	f (Hz)	P1 (W) ±10%	I (A)±10%	n (r/min) ±10%	Noise dB(A)
△	3~400	50	640	1.55	1400	74
Y	3~400	50	500	0.85	1250	71

Technical specification:

1. All parts of fan should be properly assembled, no oil or dirt on the surface, no obvious distortion, mechanical damage and other defects.
2. Fan rotation is flexible, no delay, no operation sound, no scratch and other undesirable phenomena.
3. The safety requirement of fan is performed according to GB12350-2009, the electrical strength is 1800V•S, and the insulation resistance is not less than 100MΩ at room temperature.
4. Motor insulation class, F CLASS.
5. Motor protection level, IP54, fan protection level, IP2X.
6. The fan balance level is: 1400±10%r/min high than G6.3, vibration value is less than 5.4mm/s.
7. External TMP.
8. 560 concave mesh N100.

Nameplate:

DYNAIR DYN-4D S550-T-F 400V/50Hz CL.F
△: 640W 1.55A 1400r/min
Y : 500W 0.85A 1250r/min IP54 2018/07
CE

		The signature	(date) (month) (year)	
state	Deliver before			
	after the confirmation			Product Specification
drawing				
audit				
approval				