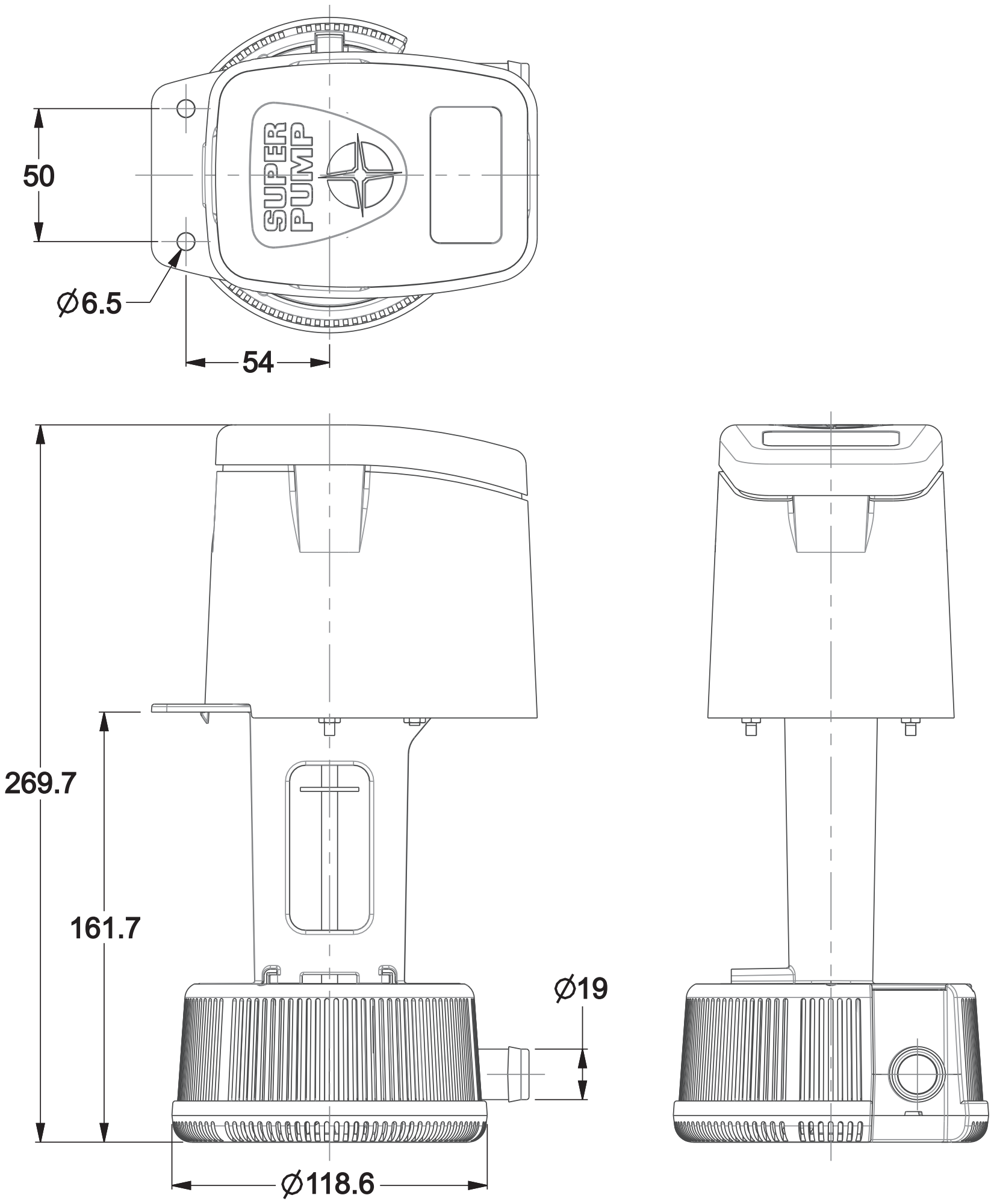
SUPER
PUMP
50
Ø6.5
54
269.7
161.7
Ø19
Ø118.6